SERCOS-III - Innovation by Combining SERCOS interface™ and Ethernet

Interests group SERCOS (IGS) has considered the tendency to apply Ethernet in the automation industry, and has decided to combine the proven mechanisms of SERCOS interface™ with the advantages of Ethernet in a Third Generation SERCOS interface, to be named SERCOS-III.

SERCOS interface today

In the eighties, the German ZVEI and VDW organizations initiated a consortium to specify a digital open interface that would ease the transition from analog to digital drive technology. Thus, the SERCOS interface was born. The first generation SERCOS interface supported transfer rates of 2 and 4 Mbit/s and was mainly used for advanced machine tool applications. In following years, the interface was widely accepted worldwide in many different industries, and in 1995 the SERCOS interface was approved as IEC standard 61491.

The second generation followed in 1999. The transfer rate was increased to 8 and 16 Mbit/s and the service channel for the transfer of non-synchronous data was expanded. This technology has been available since 2001 in the SERCOS816 ASIC, with downward compatibility to the first generation.

The collision-free data transmission based on a time slot mechanism, together with the highly efficient communications protocol of the SERCOS interface, ensures very high performance and the best possible determinism. Up to 40 axes can be synchronized with a cycle time of 1 msec and a jitter less than 1 usec.

With this performance, the SERCOS interface is clearly ahead of other standardized interfaces like Profibus or CAN. Not even the solutions that are based on 'Fast-Ethernet' with data rates of 100 Mbit/s show a better performance.

For these reasons, the SERCOS interface has become a de-facto standard in various industries, especially for multi-axis applications.

The SERCOS interface has revolutionized whole areas of machine building, e.g., the shaftless printing machine with its more than 100 axes synchronized via the SERCOS interface.

The SERCOS interface was originally intended to be a drive interface, but now has become a universal motion control interface. It is not only a real time communication system, but also offers more than 400 standardized parameters that describe the interplay of drives and controls in terms independent of any manufacturer. It has also become common to couple I/O stations to the bus, so that an additional fieldbus can be dispensed with in most standalone machines.

SERCOS interface stands for openness, sturdiness and worldwide availability

More than 50 control manufacturers and 30 drive manufacturers offer SERCOS interface products. Several manufacturers offer SERCOS interface I/O stations plus hardware and software development tools. Most of the drive interfaces on the market are proprietary and can only be used with the manufacturer's own drives. Considering the high number of different manufacturers offering SERCOS interface components, and its status as International standard IEC/EN 61491, SERCOS is the only interface that really deserves being denominated as an open motion & I/O interface.

The widespread presence of SERCOS components in current control and drive applications represents the vast variety of application possibilities. All parts of motion control applications can be realized with SERCOS.

SERCOS' openness also extends to the license policy – any manufacturer can implement the SERCOS interface without having to pay license or membership fees. However, in order for the SERCOS interface Conformance-Tested logo to appear on a product, it must pass a conformance test administered by a testing facility authorized by Interests Group SERCOS interface, e.V. There is a modest charge for this.

Why SERCOS-III?

The current real time abilities of the SERCOS interface are sufficient for all present-day applications. This is one of the reasons why there has been no change in physics during the few last years. The discussions about Industrial Ethernet were and are mainly about synchronization mechanisms, real time abilities and the integration of protocols from the office and Internet world.

Many of the new developments in the Industrial Ethernet area break new ground and require the definition of new communication profiles. But, for the main challenges, SERCOS interface has long since offered solutions:

- Hardware based synchronization
- Time slot mechanisms to avoid collisions
- Efficient protocols
- Transfer of real time and non-real time data

The SERCON816 communications controller (ASIC) has a structure that does not require an additional communication processor in applications. SERCOS interface communication mechanisms do not need a great deal of computing power, so that the application processor can fulfill these tasks. This makes cost effective products possible.

The SERCOS interface not only defines the protocol structure, but also includes an ample variety of profile definitions (parameters and functionalities), which are already successfully used in a great number of applications. This facilitated the idea of combining the proven mechanisms and properties of the SERCOS interface with the Ethernet physics, thus creating an advanced version of the most successful open motion control communication interface. It is this idea that makes SERCOS interface different from the others. SERCOS-III means: "Use the tried-and-tested technologies and participate in new technologies at the same time."

Distinct features of SERCOS-III

Only a technology that offers substantial advantages is worth being launched in the market. SERCOS-III offers the following advantages:

- Protection of investment due to high compatibility with previous SERCOS interface (topology, profiles, telegram structures, synchronization)
- Reduction of hardware costs for a SERCOS-III interface connection to the level of an analog interface
- Integration of IP protocols
- Cross communication between slaves
- Synchronization of several motion controls
- Transfer of safety-relevant data possible
- Fault tolerance in case of a break in the ring

A more detailed description of some of the points follows.

Topology

SERCOS-III will have a ring structure like the current generation SERCOS interface. Conditional on the Ethernet physics, however, it is not a single, but a double ring structure (Fig. 1). This double ring structure offers the possibility of redundant data transfer.

This is an enhancement to the second generation SERCOS. With SERCOS-III, in case of a break at any point in the ring, the communication continues. The plant works on while the integrated diagnostics tool signals the break, which can be repaired without interfering with the plants' performance.

In addition to the ring structure, a linear structure is also possible. The linear structure doesn't offer the redundancy advantage, but it does save a wire connection. SERCOS-III does not use the star topology of the standard Ethernet. There are no hubs or switches needed.

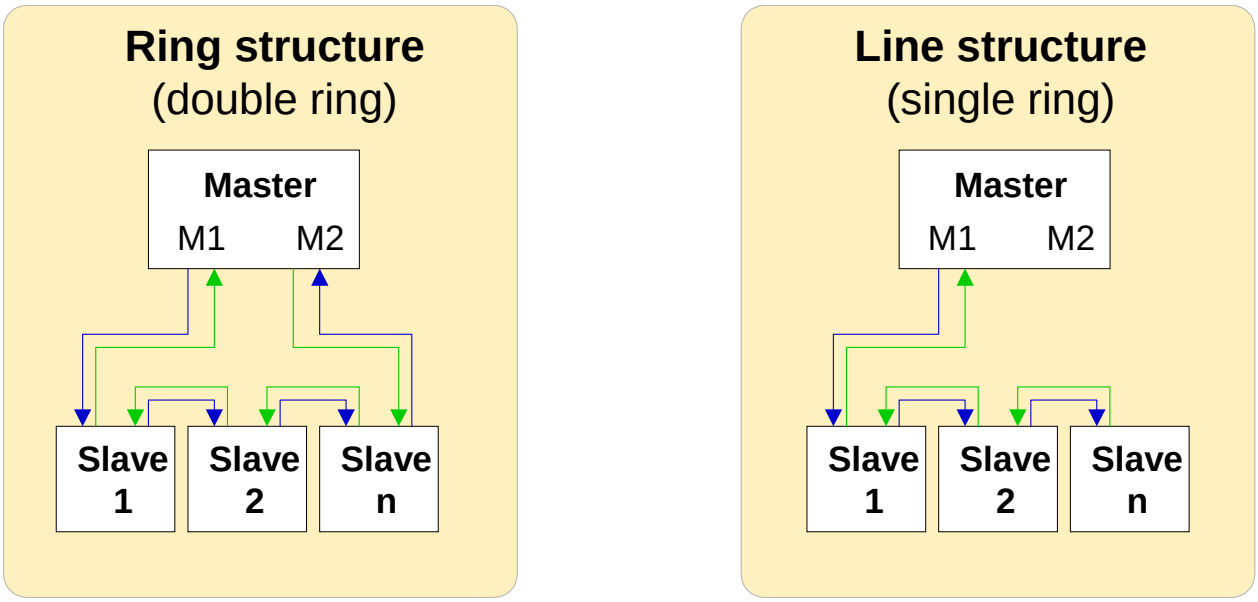

With hardware redundancy

Without hardware redundancy

Figure 1: SERCOS-III topologies

Direct communication between slaves

A direct communication between the slaves is currently not possible with the SERCOS interface. However, this feature would be advantageous in some motion control applications. The Ethernet physics enable such a data transfer from slave to slave, and the new SERCOS-III will support this feature.

IP-channel

The SERCOS interface has a service channel, which can be used for the transfer of communication data as well as parameter or diagnostic data. To keep SERCOS-III downward compatible, it too will have the service channel. An additional optional IP channel can be added, with which it is possible to transfer real time or non-real time data by standard Ethernet frames. The cyclic channel and the IP channel are configurable.

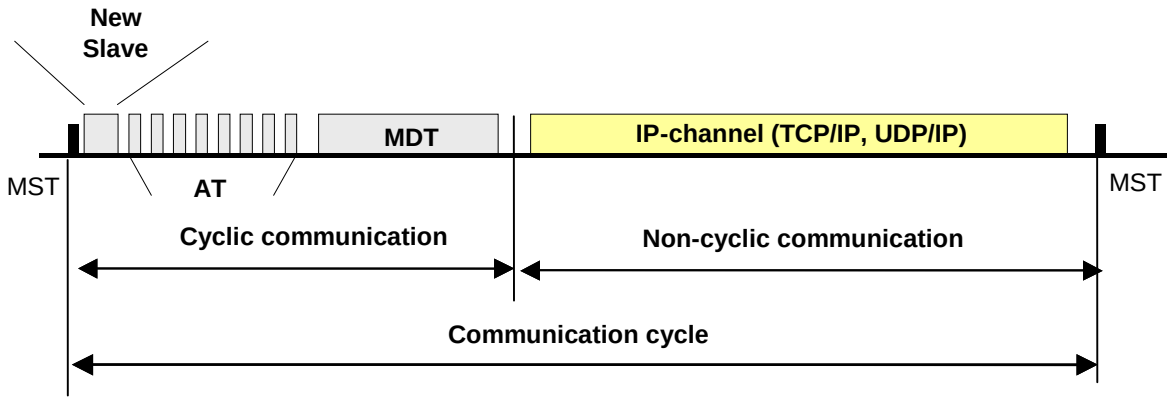

Structure of cyclic data:

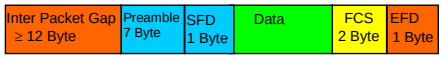

Optimized frame

Structure of non-cyclic data:

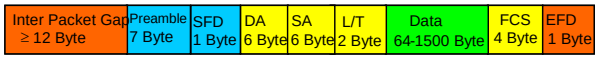

Standard Ethernet frame

Figure 2: Cyclic and non-cyclic communication

Motion control communication for centralized and decentralized drive concepts

SERCOS-III halves the minimum cyclic time of the current SERCOS interface from 62.5 µs down to 31.25 µs. Because of the greater bandwidth of the Ethernet physics, it is still possible to connect an adequate number of slaves, despite the short cycle time. Thus, it is possible to implement not only decentralized drive concepts but also concepts with centralized signal processing. With a decentralized drive concept, all control loops are closed in the drive. With centralized concepts, only the current loop is closed in the drive, whereas all other loops of several axes are implemented in the central control electronics. SERCOS-III is the only open motion control system that supports these structures.

Synchronization of motion controls

The trend towards modularization requires motion control concepts that offer the possibility of synchronizing several machine modules (Fig. 3). Some proprietary solutions, based on SERCOS interface physics, already exist. The aim of SERCOS-III is to standardize this type of communication. It is planned to define a profile for the synchronization and communication between motion controls.

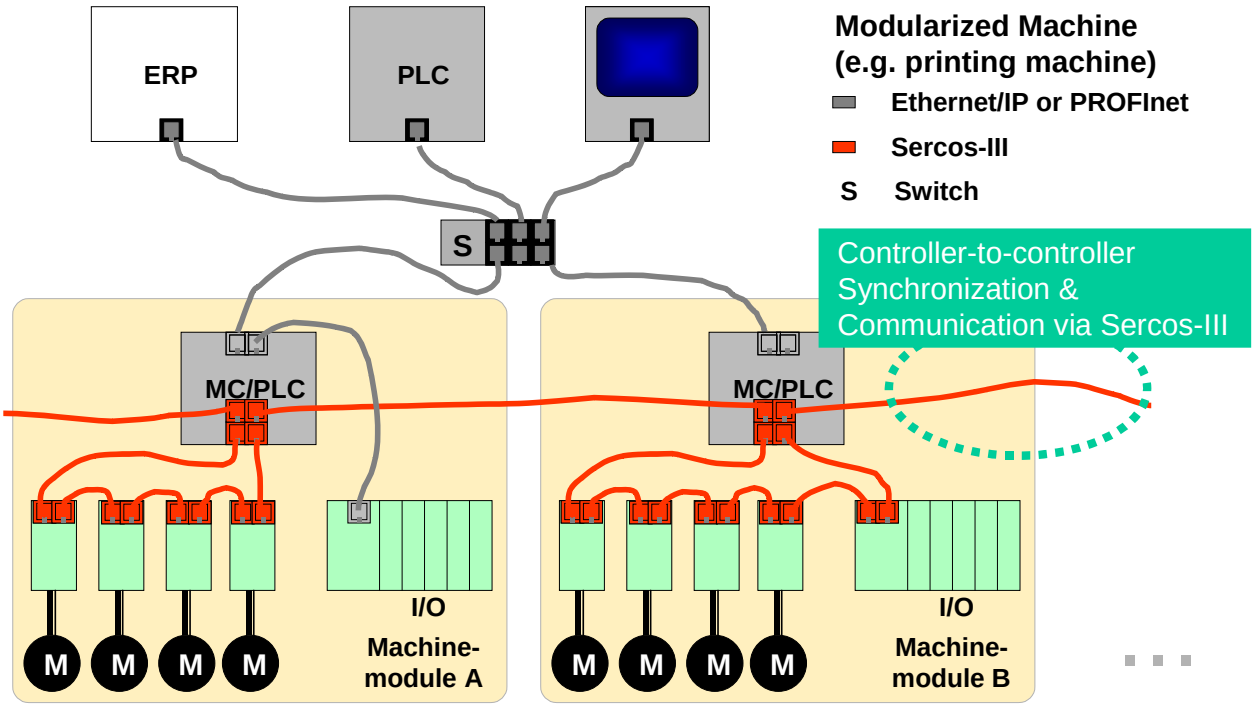

Figure 3: Synchronization of machine modules with SERCOS-III

Safe data transfer

Safety functions will be part of the future standard in motion controls and drives. Safe data transfer will be supported from the very beginning; safe and non-safe data will be transferred with the same mechanisms.

SERCOS-III performance

SERCOS-III will have a substantial increase in transmission speed. Some typical values are listed in Figure 4.

Size of Cyclic Data	Cycle Time	No of Drives	Type of Cyclic Data
8 Byte	31.25 us	8	Torque command, actual position
12 Byte	250 us	70	Speed command and actual value, position command and actual value
32 Byte	1 ms	150	Numerous command and actual values
16 Byte	1 ms	254 (max. number of drives)	Numerous command and actual values

Figure 4: SERCOS-III performance

SERCOS-III hardware

The current SERCOS interface generations have been supported by a communication ASIC (SERCON 816). A more flexible hardware solution is planned for SERCOS-III.

Therefore, the development of a SERCOS core (SERCOS-III IP) is necessary. With this, manufacturers of components and systems will be able to combine the SERCOS-III hardware and their own logic components in one common FPGA.

The Interests Group SERCOS accepts the propagation of SERCOS-III hardware sources to be integrated in communication controllers. Some activities to create respective modules, especially for the automation industry, are already in progress. These controllers are able to support various industrial Ethernet protocols. It is thus possible to implement control and drive devices that can easily be adjusted to the respective Ethernet protocol simply by using the appropriate driver software. This is a huge advantage, not just for the manufacturers of components. The OEM needs to handle only one type of wiring. The end user profits from not having to use different hardware configurations in case he is using several different industrial Ethernet protocols in his plant.

Another important goal of SERCOS-III is the reduction of costs per node:

- No special ASIC; instead standard modules such as FPGA or communication controllers will be used.

- Ethernet couplings instead of fiber optic coupling, which means lower costs for connectors.

This also makes SERCOS-III an interesting option in very cost sensitive products.

Migration from the second to the third generation SERCOS interface

The SERCOS interface has an excellent tradition in launching new evolutionary steps. For example, the migration from the first to the second generation required only a change in the hardware (ASIC). This tradition is to be continued with SERCOS-III, keeping the migration costs low for the SERCOS users.

- Migration step 1: Replacing the fiber optic physics with the Ethernet physics. A change in hardware is necessary, too, but manufacturers of SERCOS components will have to make only minor changes in the software, if only the cyclic channel is to be used. The exclusive transmission of today's SERCOS mechanisms is the minimal implementation step and therefore is the obligatory part of SERCOS-III.
- Migration step 2: Using the enhanced possibilities of SERCOS-III.
  In addition to step 1, the new functions defined in SERCOS-III can optionally be used: IP channel, cross communication, safe data transfer, etc.
- Direct entry into SERCOS-III: For those using the SERCOS interface for the first time and starting directly with SERCOS-III, starter kits and software drivers for master and slave are planned. This will make the first use of the SERCOS interface as easy as possible.

SERCOS-III compared to other Ethernet-based real time communication systems

Figure 5 illustrates the types of communication needed by the automation industry, classified into 4 real time types. The figure shows the coverage provided by the ODVA, PNO and IGS solutions.

The SERCOS-III standard covers all relevant real time areas.

The standard Ethernet communication is also included, if the IP channel is used without the cyclic real-time channel.

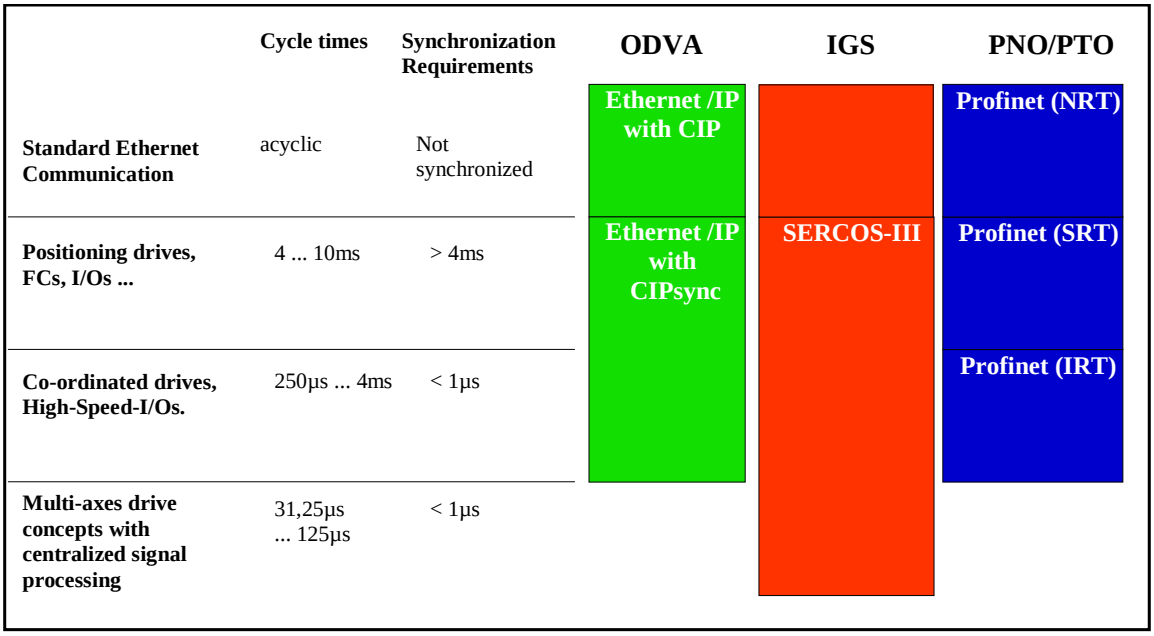

Figure 5: Coverage of real time requirements

When will SERCOS-III be available?

The basic concept has been defined and approved by the SERCOS member organizations in Europe, North America and Japan. Detailed specifications are being developed by a technical working group, which includes various member companies. Since SERCOS-III is based on proven and tested profiles, work on the specifications will mainly concentrate on the hardware and additional features. First prototypes of the SERCOS-III hardware will be available in 2004, with first products envisioned for 2005.

Summary

SERCOS-III is the next logical step in the evolutionary history of the SERCOS interface. In addition to low costs and an outstanding data transfer performance, new features are planned that will substantially enhance the application range.